BERNSTEIN

Safety Rope Pull Switches
SR, SRM and SRO

Safety Rope Pull Switches –
For more safety on the production line

When it comes to maximum safety on the assembly line, in the production line or directly at the machine, Bernstein AG's Safety Rope Pull Switches are a reliable and proven solution.

The switches can be deployed flexibly, are easy to install and convenient to handle. And most importantly: they offer maximum safety when it is needed.

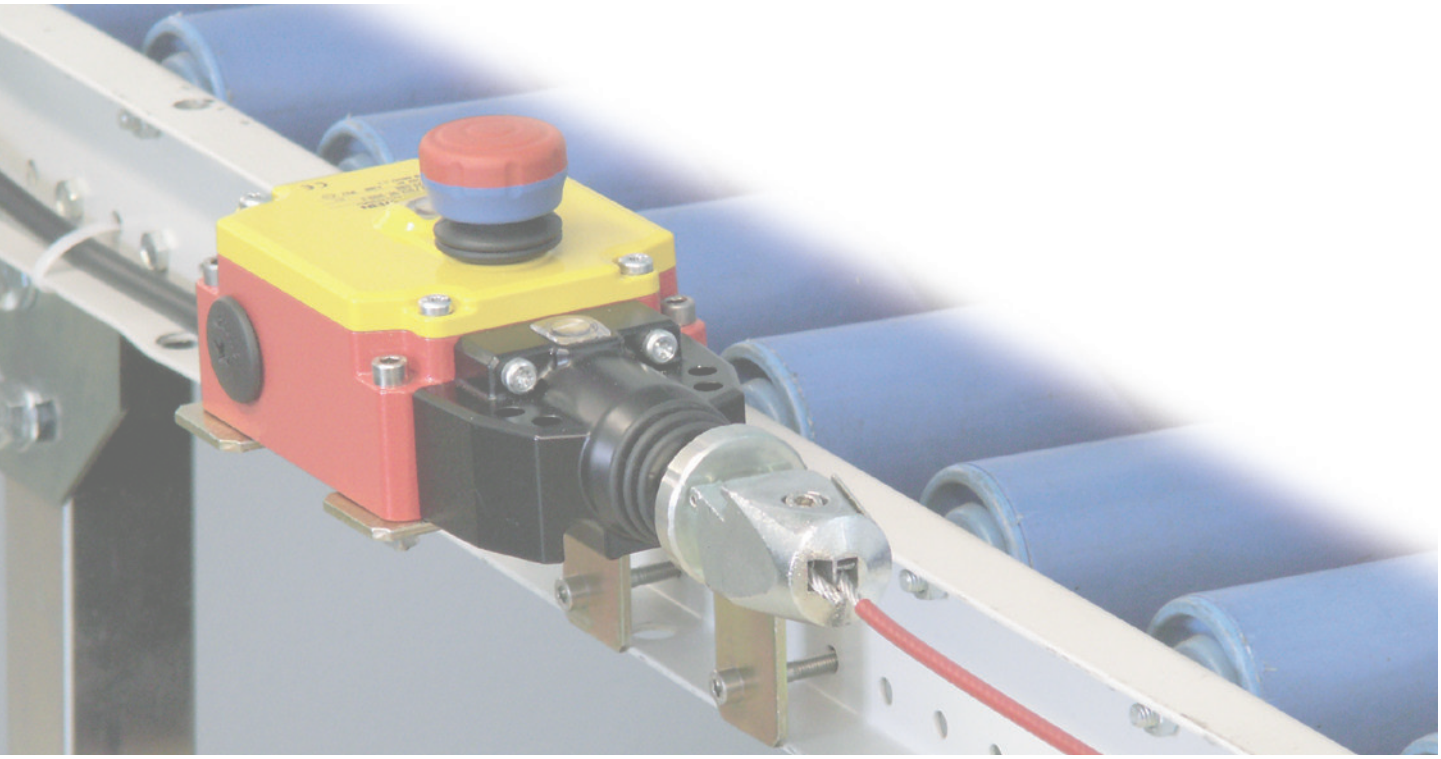

According to the Machinery Directive, machines must be equipped with at least one emergency stop which can stop a dangerous process at any time in order to prevent injury to people, but also damage to machines or materials. With the help of a safety rope pull switch, this is possible in a simple and cost-efficient manner. Only one switch and one rope are required whilst, at the same time, still being able to protect a large area.

The safety rope pull switching devices developed and manufactured by BERNSTEIN AG are designed and approved in accordance with the IEC 947-5-5, IEC 60947-5-5 and ISO 13850 standards.

The European standard requires a possible triggering of the emergency stop signal by pulling the rope in each actuation direction. This is realised by integrating a return spring in the system.

On actuation or in the event of cable breakage, the emergency stop switching device locks automatically and can only be reset to its initial setting by using the resetting device on the switch.

PRODUCT CHARACTERISTICS

- Easy to install with Quick-Fix quick-release device
- Flexible application due to different lengths
- Optional integrated emergency stop impact button
- A cover over the mechanical parts ensures the switches are tamper-proof
- Connection area and mechanical components are separate for additional safety

SRO → metal enclosure or plastic enclosure

SRM → metal enclosure

SR → plastic enclosure

Small and compact – **SRO**

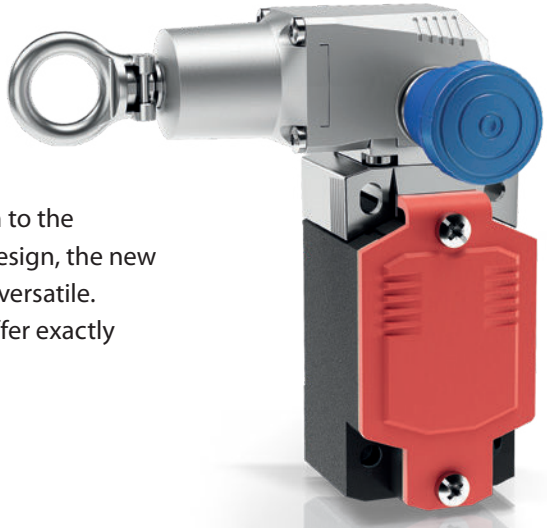

BERNSTEIN has now added a particularly small and compact version to the product family of safety rope pull switches. Thanks to its modular design, the new **SRO (Safety Rope Pull)** is extremely space-saving as well as highly versatile. This modular principle has the advantage of always being able to offer exactly the right product for a specific customer application.

Product characteristics

- As a metal or thermoplastic variant – or as a combination of both
- Compact design for confined spaces
- Emergency stop button upon request
- Max. rope length of 30 m
- Up to 4 contacts

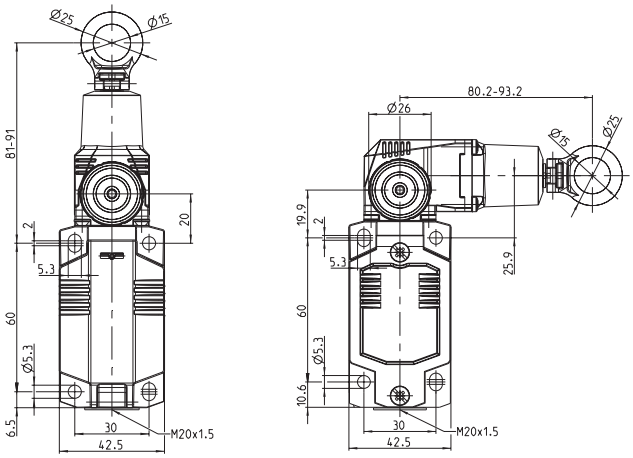

Technical data

- **Rated insulation voltage:** U_i 400 V AC
- **Rated operating voltage:** U_e 240 V
- **Utilization category / switching capacity:** AC-15, 240 V / 3 A ; DC-13, 240 V / 1.5 A
- **Mechanical switching frequency:** max. ≤ 20/min.
- **Mechanical service life:** 1 x 10^5 switching cycles
- **B10d:** 2 x 10^5 cycles
- **Admissible ambient temperature:** –30 °C to +75 °C
- **Protection class:** IP67 in accordance with IEC 60529
- **Enclosure:** Thermoplastics, glass-fibre reinforced (UL 94-V0) or die-cast aluminium
- **Approvals:**

DGUV Deutsche Gesetzliche Unfallversicherung *in preparation*

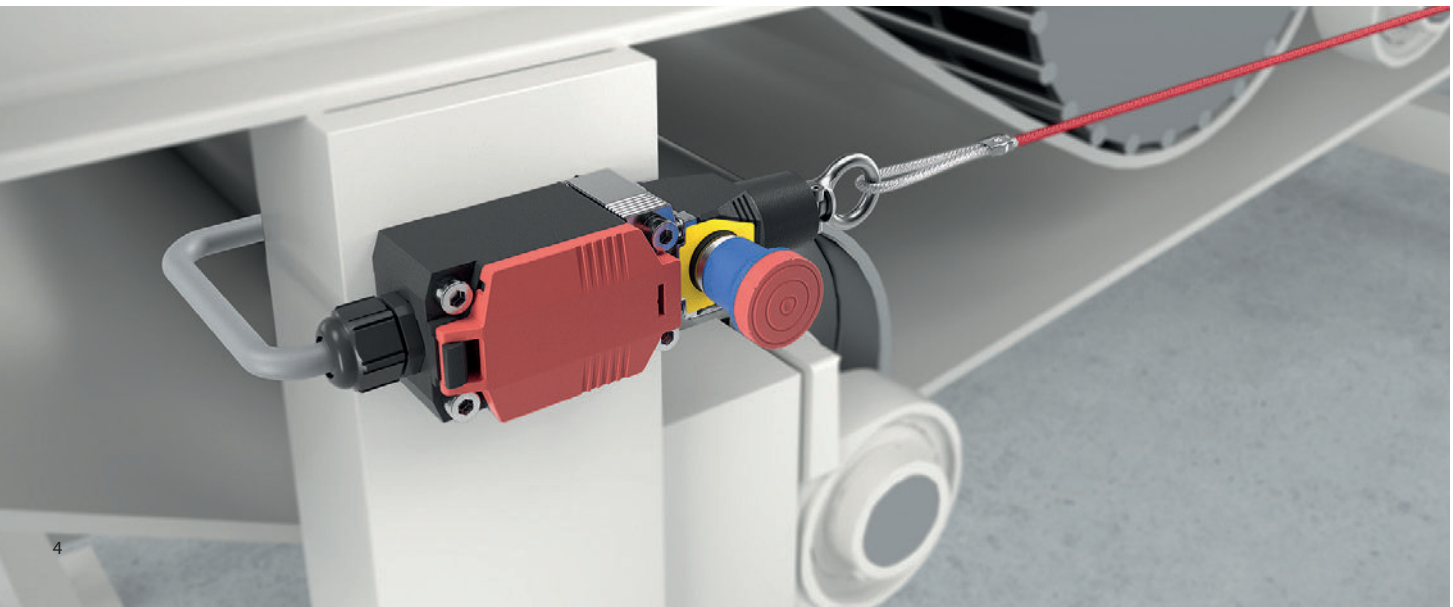

Additional features
SRO

Emergency stop button (red)

- Emergency stop button directly on the unit, thus a stop is possible directly on the switch

Reset button (blue)

- In the case of concealed installation, an emergency stop on the unit is not permitted; BERNSTEIN offers units with “only” reset buttons for this purpose

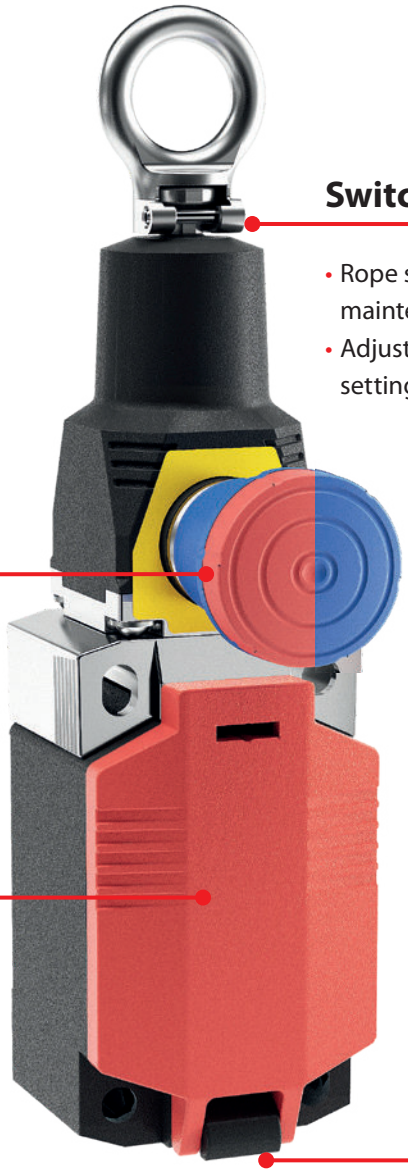

Switching status indicator

- Rope status display for set-up and maintenance
- Adjustment indicator for correct setting of the rope tension

Flexible contact assembly

- A maximum of 4 contacts are available for monitoring of the emergency stop function
- An individual assignment of the number and function of the contacts (NO / NC) is possible

M20 cable entry

- Possible from below
- **Optionally available:** with M12 connector

Order data
SRO

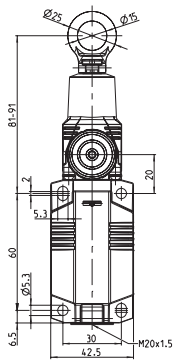

SRO-I73...VT...

Article number	Designation	Contact type	Max. span length **
without emergency stop			
6011811127	SRO-I73-11-VT30-1	1 NC/1 NO	max. 30 m
6011861128	SRO-I73-20-VT30-1	2 NC	max. 30 m
6011821129	SRO-I73-22-VT30-1	2 NC/2 NO	max. 30 m
6011891130	SRO-I73-31-VT30-1	3 NC/1 NO	max. 30 m
Insulated encapsulated			

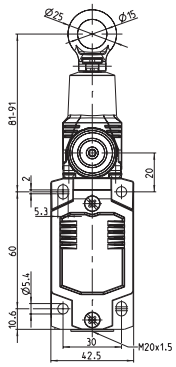

SRO-M78...VT...

Article number	Designation	Contact type	Max. span length **
without emergency stop			
6012811136	SRO-M78-11-VT30-1	1 NC/1 NO	max. 30 m
6012861137	SRO-M78-20-VT30-1	2 NC	max. 30 m
6012821138	SRO-M78-22-VT30-1	2 NC/2 NO	max. 30 m
6012891139	SRO-M78-31-VT30-1	3 NC/1 NO	max. 30 m
Metal encapsulated			

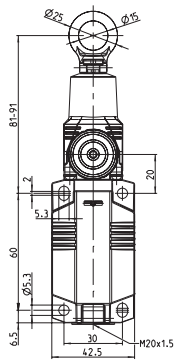

SRO-I73...VT...

Article number	Designation	Contact type	Max. span length **
with emergency stop			
6011811131	SRO-I73-11-VT30-2	1 NC/1 NO	max. 30 m
6011861132	SRO-I73-20-VT30-2	2 NC	max. 30 m
6011821133	SRO-I73-22-VT30-2	2 NC/2 NO	max. 30 m
6011891135	SRO-I73-31-VT30-2	3 NC/1 NO	max. 30 m
Insulated encapsulated			

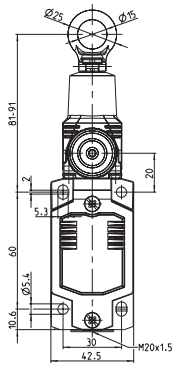

SRO-M78...VT...

Article number	Designation	Contact type	Max. span length **
with emergency stop			
6012811140	SRO-M78-11-VT30-2	1 NC/1 NO	max. 30 m
6012861141	SRO-M78-20-VT30-2	2 NC	max. 30 m
6012821142	SRO-M78-22-VT30-2	2 NC/2 NO	max. 30 m
6012891143	SRO-M78-31-VT30-2	3 NC/1 NO	max. 30 m
Metal encapsulated			

Order data
SRO

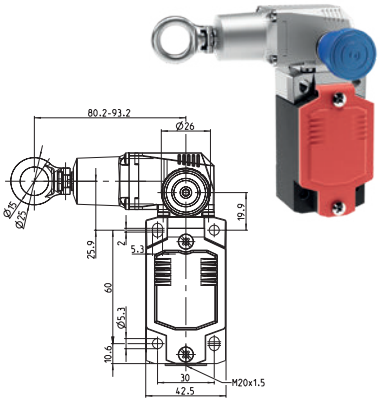

SRO-M78...HL...

Article number	Designation	Contact type	Max. span length **
without emergency stop			
6012811144	SRO-M78-11-HL30-1	1 NC/1 NO	max. 30 m
6012861145	SRO-M78-20-HL30-1	2 NC	max. 30 m
6012821146	SRO-M78-22-HL30-1	2 NC/2 NO	max. 30 m
6012891147	SRO-M78-31-HL30-1	3 NC/1 NO	max. 30 m
Metal encapsulated			

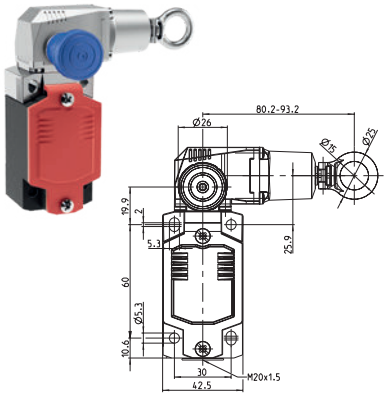

SRO-M78...HR...

Article number	Designation	Contact type	Max. span length **
without emergency stop			
6012811152	SRO-M78-11-HR30-1	1 NC/1 NO	max. 30 m
6012861153	SRO-M78-20-HR30-1	2 NC	max. 30 m
6012821154	SRO-M78-22-HR30-1	2 NC/2 NO	max. 30 m
6012891155	SRO-M78-31-HR30-1	3 NC/1 NO	max. 30 m
Metal encapsulated			

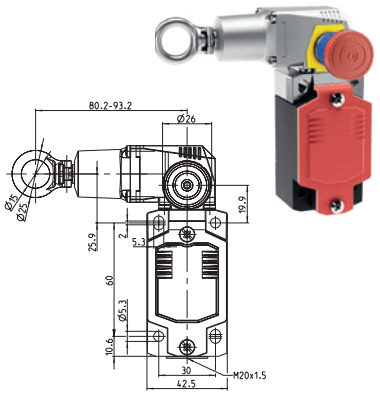

SRO-M78...HL...

Article number	Designation	Contact type	Max. span length **
with emergency stop			
6012811148	SRO-M78-11-HL30-2	1 NC/1 NO	max. 30 m
6012861149	SRO-M78-20-HL30-2	2 NC	max. 30 m
6012821150	SRO-M78-22-HL30-2	2 NC/2 NO	max. 30 m
6012891151	SRO-M78-31-HL30-2	3 NC/1 NO	max. 30 m
Metal encapsulated			

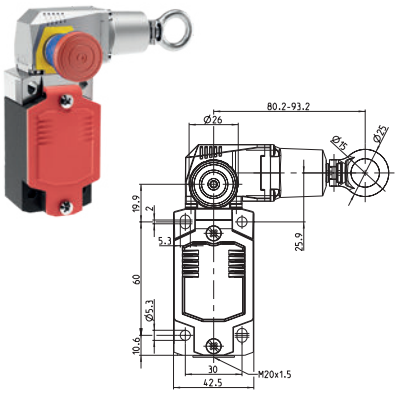

SRO-M78...HR...

Article number	Designation	Contact type	Max. span length **
with emergency stop			
6012811156	SRO-M78-11-HR30-2	1 NC/1 NO	max. 30 m
6012861157	SRO-M78-20-HR30-2	2 NC	max. 30 m
6012821158	SRO-M78-22-HR30-2	2 NC/2 NO	max. 30 m
6012891159	SRO-M78-31-HR30-2	3 NC/1 NO	max. 30 m
Metal encapsulated			

The weather-proof all-rounder – **SRM**

Even under extreme conditions, such as major temperature fluctuations, the SRM rope pull switch continues to work reliably.

Product characteristics

- Rope pull switch manufactured in accordance with IEC 60947-5-5 and ISO 13850
- Protection class IP67
- Stable and durable metal housing (Aluminium pressure die-casting)
- Suitable for outdoor use
- Can be deployed at temperatures between –30 °C and +80 °C
- Easy to fasten due to hole template patterns common for most rope pull switch models
- Flexible handling with three M20 x 1.5 cable entries
- Easy installation due to the maximum connection space
- Up to four positively driven NC contacts ⊕
- Separate-action built-in switches

Technical data

- **Rated insulation voltage:** U_i 250 V AC
- **Rated operating voltage:** U_e 240 V
- **Utilization category / switching capacity:**
  AC-15, 240 V / 3 A ; 120 V / 6 A
  DC-13, 250 V / 0.27 A ; 125 V / 0.55 A
- **Mechanical switching frequency:** max. ≤ 20/min.
- **Mechanical service life:** 1 x 10^5 switching cycles
- **B10d:** 2 x 10^5 cycles
- **Admissible ambient temperature:** –30 °C to +80 °C
- **Protection class:** IP67 in accordance with IEC 60529
- **Enclosure:** Die-cast aluminium
- **Approvals:**

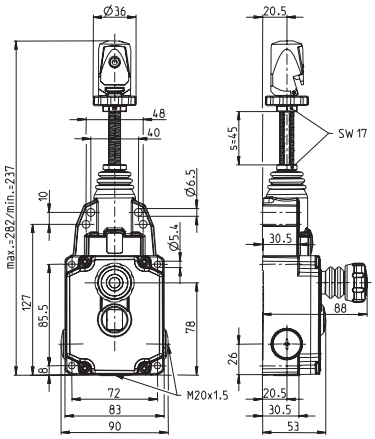

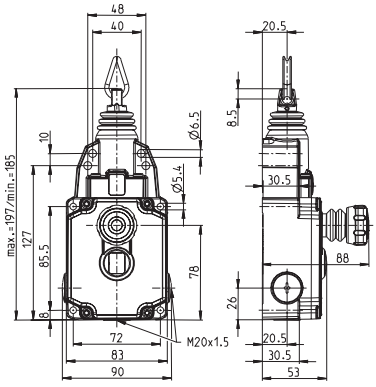

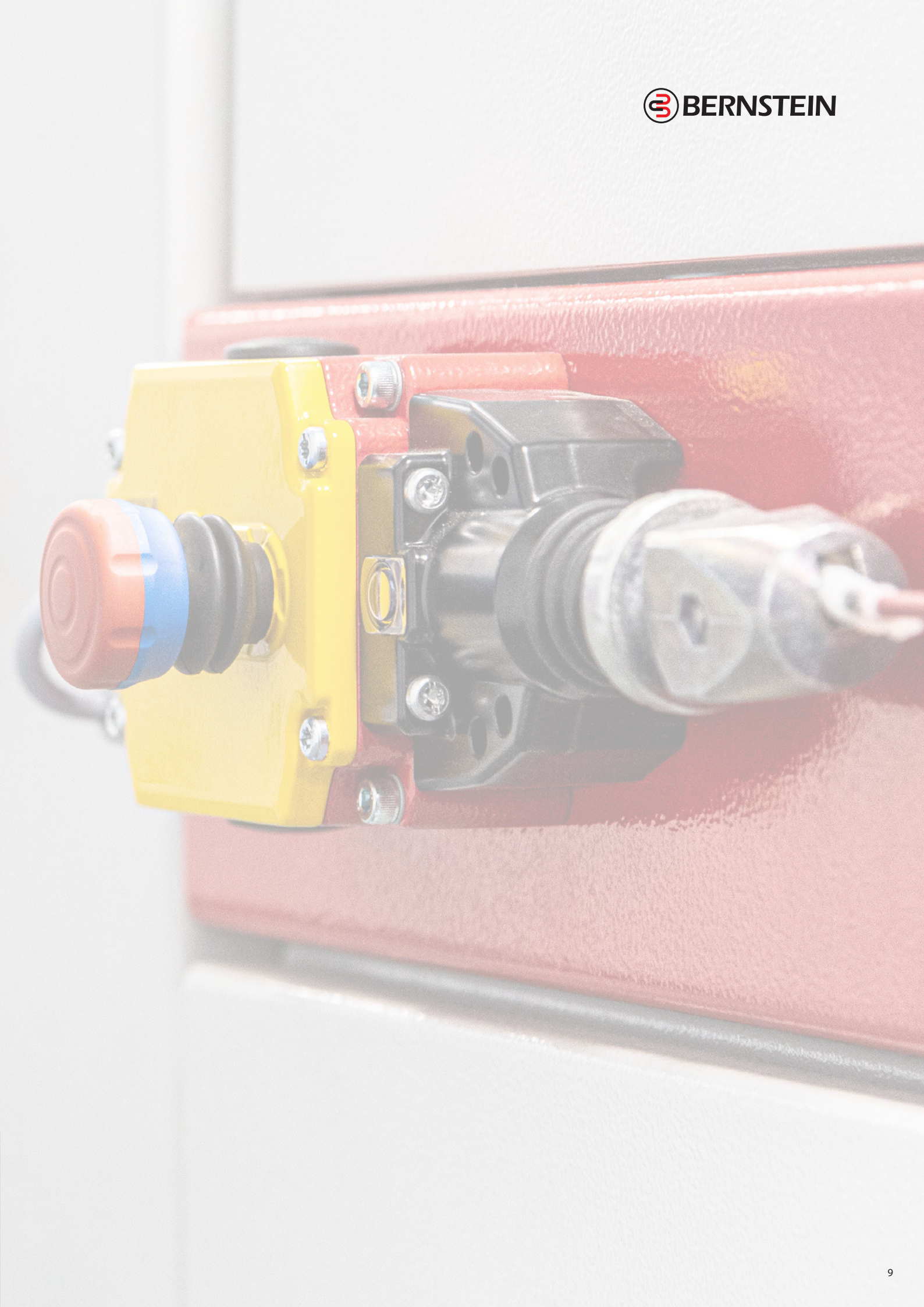

Additional features
SRM

Double function of palm button

- The BERNSTEIN rope pull switch emergency stop buttons provide emergency stop function and pull release on actuation or in the event of cable breakage

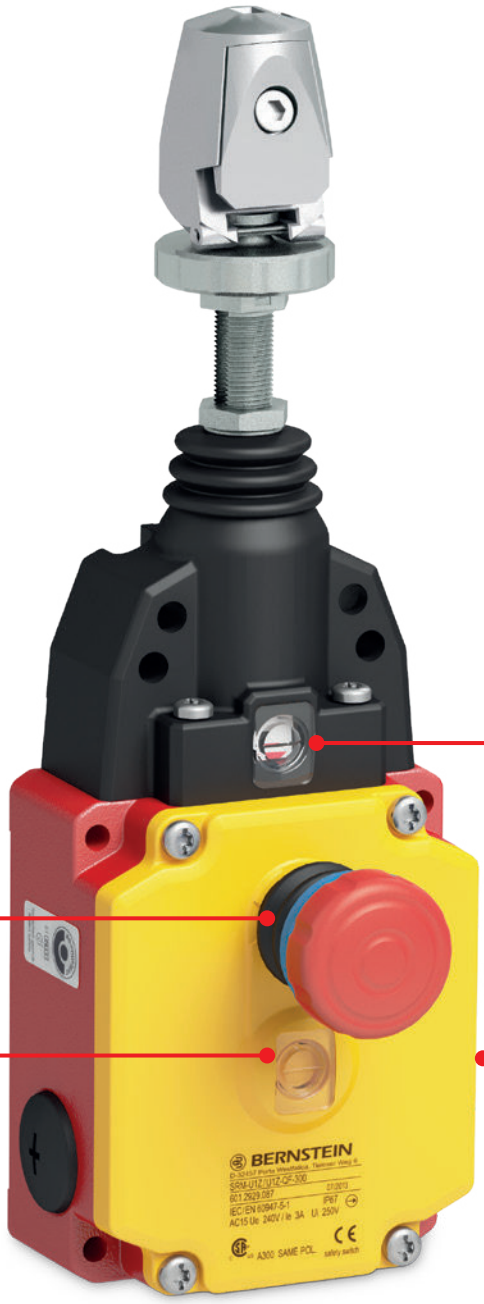

Switching status indicator

- Highly readable switching status indicator located on the switch
- Yellow in the inspection window indicates locking status
- Green in the inspection window indicates operational readiness

Normal operation

Rope actuation by operator – Latch automatically

Rope rupture – Latch automatically

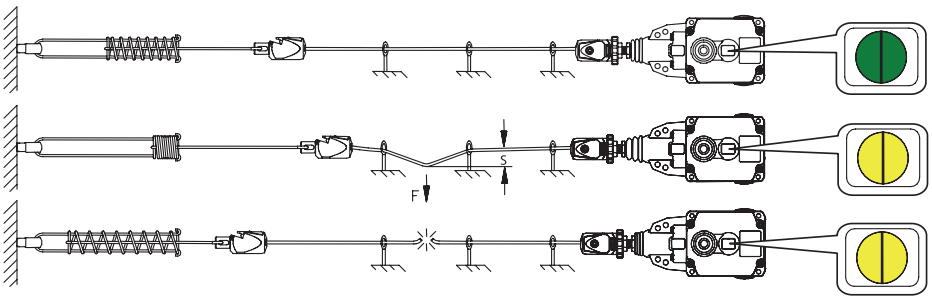

Rope status display

- Rope status display for set-up and maintenance
- Adjustment indicator for correct setting of the rope tension

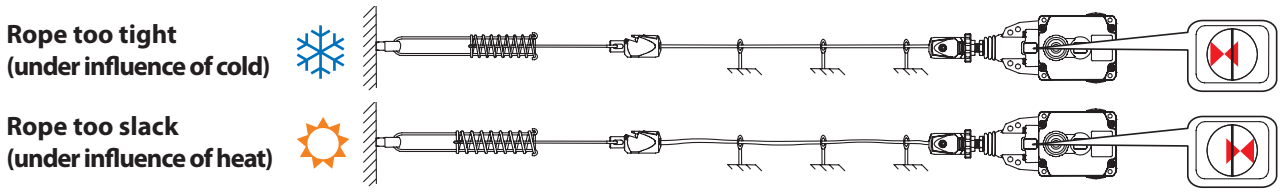

Teleindication for monitoring the rope tension

- Critical rope conditions caused by any change in length of the rope are reported via an integrated sensor. Unnecessary downtime of the machine can be avoided by appropriately readjusting the tension
- This signal is not highly safety critical
- BERNSTEIN also offers additional indicator lights as optional extras

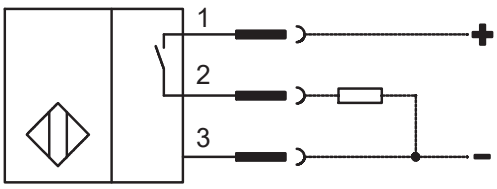

- Rated operating voltage U_e 24 V DC
- Rated operating current I_e 50 mA
- Utilisation category DC-13
- Protected against polarity reversal and short-circuits

Order data
SRM

Article number *	Designation	Contact type	Max. span length **	Features
6012929087	SRM-U1Z/U1Z-QF-300	2 NC/2 NO	75 m	Quick-Fix QF
6012999096	SRM-A2Z/U1Z-QF-300	3 NC/1 NO	75 m	Quick-Fix QF
6012929088	SRM-U1Z/U1Z-QF-300-E	2 NC/2 NO	75 m	Quick-Fix QF, remote indicator E
6012999097	SRM-A2Z/U1Z-QF-300-E	3 NC/1 NO	75 m	Quick-Fix QF, remote indicator E
6012929085	SRM-U1Z/U1Z-QF-175	2 NC/2 NO	37.5 m	Quick-Fix QF
6012999094	SRM-A2Z/U1Z-QF-175	3 NC/1 NO	37.5 m	Quick-Fix QF
6012929086	SRM-U1Z/U1Z-QF-175-E	2 NC/2 NO	37.5 m	Quick-Fix QF, remote indicator E
6012999095	SRM-A2Z/U1Z-QF-175-E	3 NC/1 NO	37.5 m	Quick-Fix QF, remote indicator E
Metal encapsulated				

Article number *	Designation	Contact type	Max. span length **	Features
6012921091	SRM-U1Z/U1Z-LU-300	2 NC/2 NO	75 m	Eye LU
6012991100	SRM-A2Z/U1Z-LU-300	3 NC/1 NO	75 m	Eye LU
6012921092	SRM-U1Z/U1Z-LU-300-E	2 NC/2 NO	75 m	Eye LU, remote indicator E
6012991101	SRM-A2Z/U1Z-LU-300-E	3 NC/1 NO	75 m	Eye LU, remote indicator E
6012921089	SRM-U1Z/U1Z-LU-175	2 NC/2 NO	37.5 m	Eye LU
6012991098	SRM-A2Z/U1Z-LU-175	3 NC/1 NO	37.5 m	Eye LU
6012921090	SRM-U1Z/U1Z-LU-175-E	2 NC/2 NO	37.5 m	Eye LU, remote indicator E
6012991099	SRM-A2Z/U1Z-LU-175-E	3 NC/1 NO	37.5 m	Eye LU, remote indicator E
Metal encapsulated				

* further articles on request; ** temperature dependent – for more information see page 19

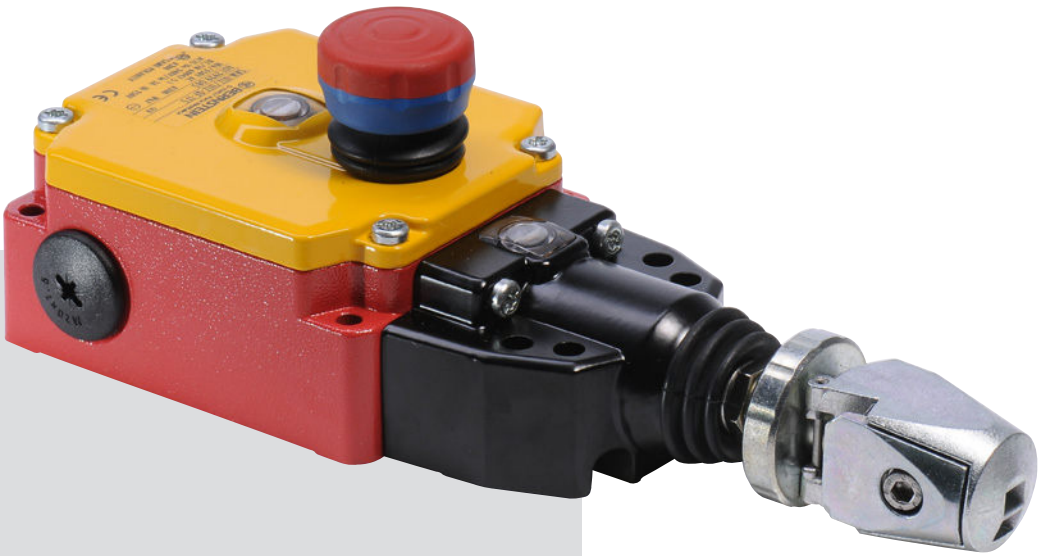

Safety when you need it – **SR**

The SR rope pull switch provides safety for your machine.

Product characteristics

- Rope pull switch manufactured in accordance with IEC 60947-5-5 and ISO 13850
- Protection class IP67
- Stable and durable plastic housing (PA 6 GV)
- Can be deployed at temperatures between –25 °C and +70 °C
- Flexible handling with three M20 x 1.5 cable entries
- Easy installation due to the maximum connection space
- Up to four positively driven NC contacts ⊖

Technical data

- **Rated insulation voltage:** U_i 250 V AC
- **Rated operating voltage:** U_e 240 V
- **Utilization category / switching capacity:** AC-15, 240 V / 3 A
- **Mechanical switching frequency:** max. ≤ 20/min.
- **Mechanical service life:** 1 x 10^5 switching cycles
- **B10d:** 1 x 10^5 cycles
- **Admissible ambient temperature:** –25 °C to +70 °C
- **Protection class:** IP67 in accordance with IEC 60529
- **Enclosure:** Glass fibre-reinforced polyamide PA 6
- **Approvals:**

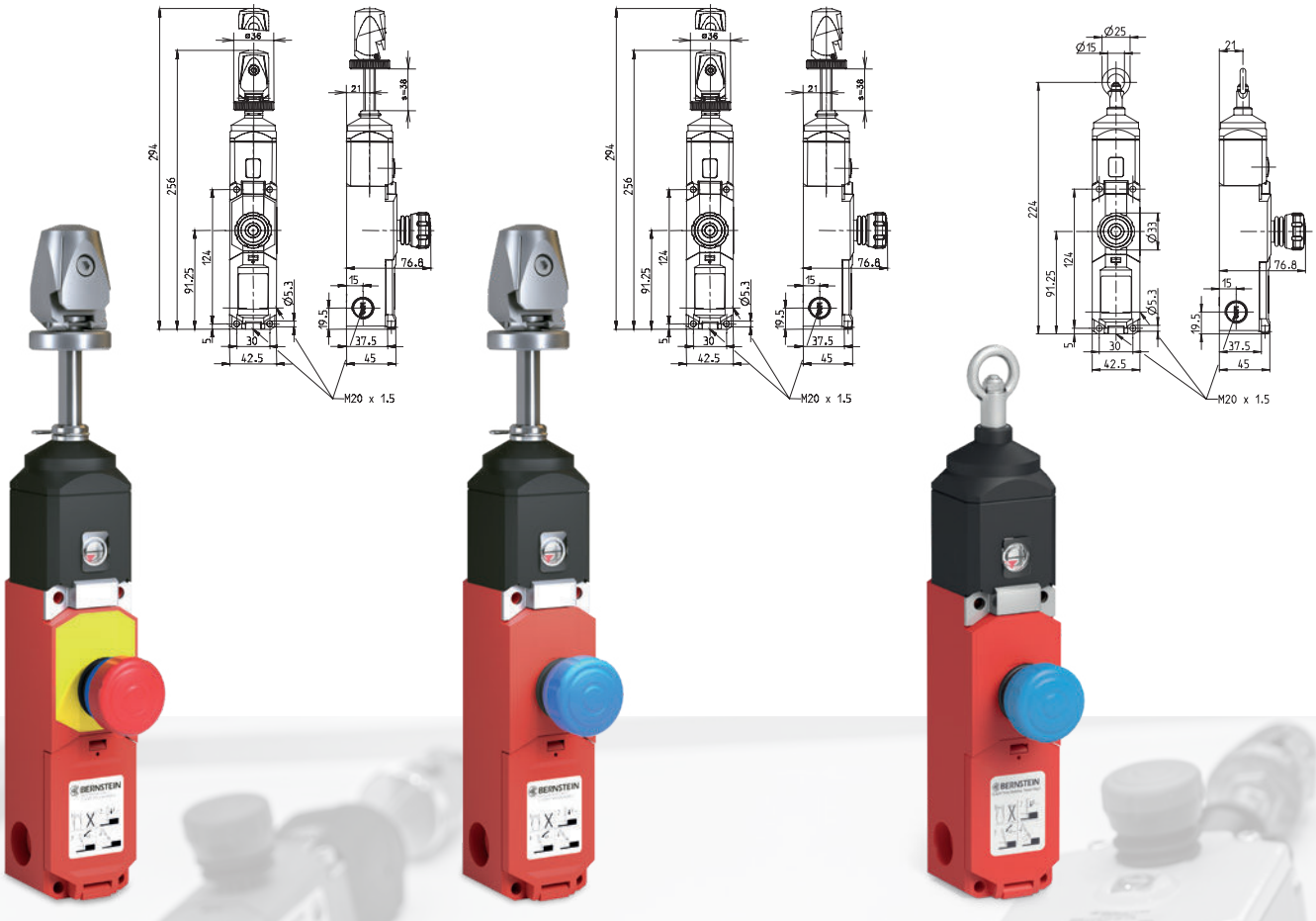

Additional features
SR

Rope status display

- Rope status display for set-up and maintenance
- Adjustment indicator for correct setting of the rope tension

Rope too tight (under influence of cold)

Rope too slack (under influence of heat)

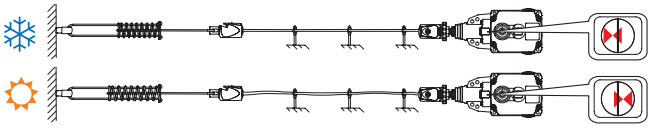

Double function of palm button

- The BERNSTEIN rope pull switch emergency stop buttons provide emergency stop function and pull release on actuation or in the event of cable breakage
- There are two options to choose from with the SR series:
  - Pull release
  - Emergency stop function + pull release (switches with this dual function are marked with “NA” in the designation)

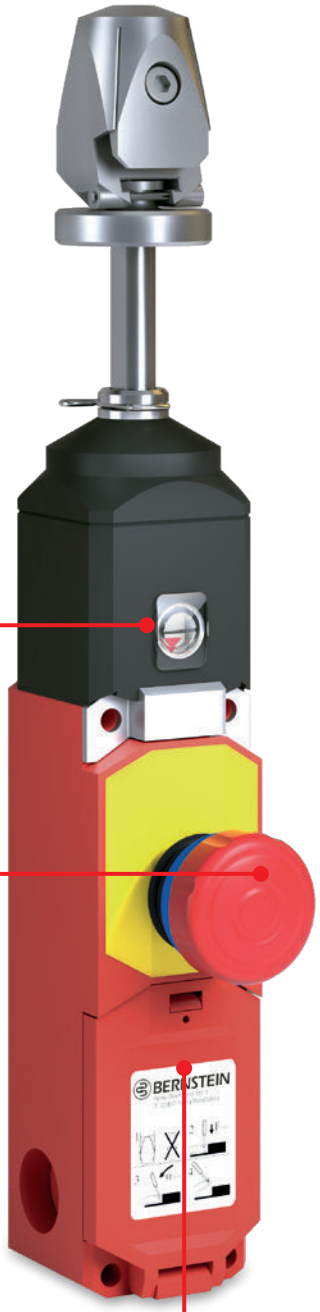

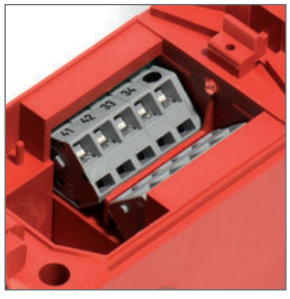

Cage clamp connection

- Quick assembly of cables with and without wire end ferrules

Order data

SR

Article number *	Designation	Contact type	Max. span length **	Features
6011629067	SR-U2Z-NA-QF-100-L0-0-0	2 NC/2 NO	25 m	Emergency stop NA, Quick-Fix QF
6011691077	SR-A4Z-NA-QF-100-L0-0-0	4 NC	25 m	Emergency stop NA, Quick-Fix QF
6011629068	SR-U2Z-NA-QF-175-L0-0-0	2 NC/2 NO	37.5 m	Emergency stop NA, Quick-Fix QF
6011691078	SR-A4Z-NA-QF-175-L0-0-0	4 NC	37.5 m	Emergency stop NA, Quick-Fix QF
6011629069	SR-U2Z-NA-QF-300-L0-0-0	2 NC/2 NO	75 m	Emergency stop NA, Quick-Fix QF
6011691079	SR-A4Z-NA-QF-300-L0-0-0	4 NC	75 m	Emergency stop NA, Quick-Fix QF
Insulated encapsulated				

Article number *	Designation	Contact type	Max. span length **	Features
6011629070	SR-U2Z-0-QF-100-L0-0-0	2 NC/2 NO	25 m	Quick-Fix QF
6011691080	SR-A4Z-0-QF-100-L0-0-0	4 NC	25 m	Quick-Fix QF
6011629071	SR-U2Z-0-QF-175-L0-0-0	2 NC/2 NO	37.5 m	Quick-Fix QF
6011691081	SR-A4Z-0-QF-175-L0-0-0	4 NC	37.5 m	Quick-Fix QF
6011629072	SR-U2Z-0-QF-300-L0-0-0	2 NC/2 NO	75 m	Quick-Fix QF
6011691082	SR-A4Z-0-QF-300-L0-0-0	4 NC	75 m	Quick-Fix QF
Insulated encapsulated				

Article number *	Designation	Contact type	Max. span length **	Features
6011621064	SR-U2Z-0-LU-100-L0-0-0	2 NC/2 NO	25 m	Eye LU
6011691074	SR-A4Z-0-LU-100-L0-0-0	4 NC	25 m	Eye LU
6011621065	SR-U2Z-0-LU-175-L0-0-0	2 NC/2 NO	37.5 m	Eye LU
6011691075	SR-A4Z-0-LU-175-L0-0-0	4 NC	37.5 m	Eye LU
6011621066	SR-U2Z-0-LU-300-L0-0-0	2 NC/2 NO	75 m	Eye LU
6011691076	SR-A4Z-0-LU-300-L0-0-0	4 NC	75 m	Eye LU
Insulated encapsulated				

* further articles on request; ** temperature dependent – for more information see page 19

Standard Rope Pull Switch
with IN73 or MN78

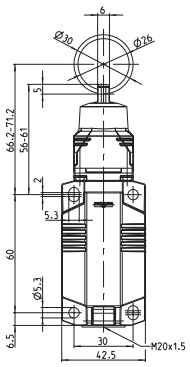

IN73-...RP

Article number	Designation	Contact type
6081000097	IN73-11 RP	1 NC/1 NO
6081000098	IN73-20 RP	2 NC
6081000099	IN73-V11 RP	1 NC/1 NO overlapping
6081000100	IN73-22 RP	2 NC/2 NO
6081000101	IN73-31 RP	3 NC/1 NO
Insulated encapsulated		

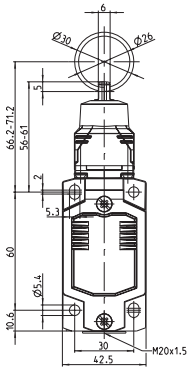

MN78-...RP

Article number	Designation	Contact type
6087000097	MN78-11 RP	1 NC/1 NO
6087000098	MN78-20 RP	2 NC
6087000099	MN78-V11 RP	1 NC/1 NO overlapping
6087000100	MN78-22 RP	2 NC/2 NO
6087000101	MN78-31 RP	3 NC/1 NO
Metal encapsulated		

Product characteristics

- High reliability at low currents (1 mA/24 VDC)
- Up to 4 contacts
- Installation collar with mounting holes made of metal
- Easy turning (8 x 45°) and changing of the actuators without a tool
- Standard switch and standard actuator according to DIN EN 50041
- Protection class IP66 and IP67 according to EN 60529

Options

- Available with M12 connectors
- Customised cables and connectors upon request

Optimised and rethought –
Quick Clamping Device Quick-Fix

The advantage of this system is not only the removal of the otherwise necessary cable eye stiffeners, cable grips and turnbuckles, but also a drastic reduction in the time required to install the cable. The customer can also quickly retighten the rope.

no more stripping of the rope necessary

MANY FEATURES AT A GLANCE

- Simplified installation of the rope pull system for emergency stop applications with rope pull switches
- Cost and time saving
- Reduced risk of injury as no rope has to be stripped
- Easy adjustment of the rope tension
- Reduction in the number of components required
- Only 1 tool necessary
- Ergonomic design (ribbed surfaces on the handle)
- Material: Zn-die cast
- Fine adjustment range: 40 mm

Rope pull counter-spring

Article number	Designation
3911042153	SR...100/SR...175/SRM...175
3911042154	SR...300/SRM...300

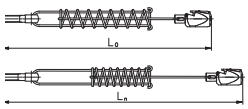

Quick clamping device QF-40

Article number	Designation
3911040001	QF-40

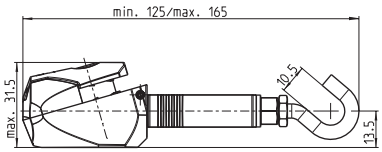

Rope

Article number	Designation
3699100025	SEIL ID3/AD MAX4

Assembly

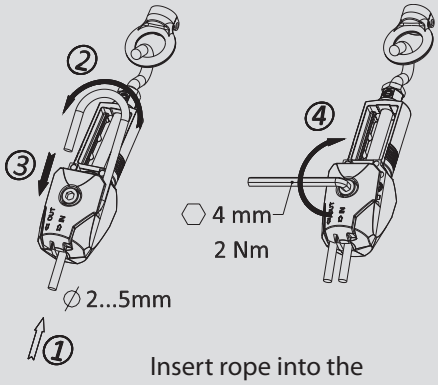

Insert rope into the Quick-fastening head

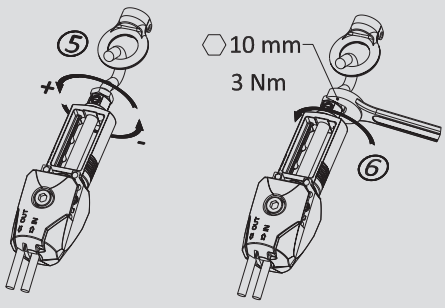

Secure clamping head with hexagon socket screw SW 4, complete assembly

A span of up to 75 metres can be achieved by using BERNSTEIN safety rope pull switches.
When a counter-spring is not used, temperature specifications must be halved.

<table>
<tr><th rowspan="2">SR / SRM</th><th colspan="40">Max. span length in metres [m]</th></tr>
<tr><th>1</th><th>2</th><th>3</th><th>4</th><th>5</th><th>6</th><th>7</th><th>8</th><th>9</th><th>10</th><th>11</th><th>12</th><th>13</th><th>14</th><th>15</th><th>16</th><th>17</th><th>18</th><th>19</th><th>20</th><th>22</th><th>24</th><th>26</th><th>28</th><th>30</th><th>32</th><th>34</th><th>36</th><th>38</th><th>40</th><th>42</th><th>44</th><th>46</th><th>48</th><th>50</th><th>55</th><th>60</th><th>65</th><th>70</th><th>75</th></tr>
<tr><td rowspan="9">max. temperature variation in Kelvin/max. (K)</td><td colspan="6">+/− 80 K ; +/− 110 K</td><td colspan="34"></td></tr>
<tr><td colspan="7">+/− 70 K ; +/− 100 K</td><td colspan="33"></td></tr>
<tr><td colspan="8">+/− 60 K ; +/− 90 K</td><td colspan="32"></td></tr>
<tr><td colspan="10">+/− 50 K ; +/− 70 K</td><td colspan="30"></td></tr>
<tr><td colspan="13">+/− 40 K ; +/− 50 K</td><td colspan="27"></td></tr>
<tr><td colspan="17">+/− 30 K ; +/− 40 K</td><td colspan="23"></td></tr>
<tr><td colspan="23">+/− 20 K ; +/− 26 K</td><td colspan="17"></td></tr>
<tr><td colspan="35">+/− 10 K ; +/− 14 K</td><td colspan="5"></td></tr>
<tr><td colspan="40">+/− 7 K ; +/− 9 K</td></tr>
<tr><td>SR...100</td><td colspan="22">Max. span 25 metres</td><td colspan="18"></td></tr>
<tr><td>SR...175 / SRM...175</td><td colspan="28">Max. span 37,5 metres</td><td colspan="12"></td></tr>
<tr><td>SR...300 / SRM...300</td><td colspan="40">Max. span 75 metres</td></tr>
</table>

<table>
<tr><th rowspan="2">SRO</th><th colspan="30">Max. span length in metres [m]</th></tr>
<tr><th>1</th><th>2</th><th>3</th><th>4</th><th>5</th><th>6</th><th>7</th><th>8</th><th>9</th><th>10</th><th>11</th><th>12</th><th>13</th><th>14</th><th>15</th><th>16</th><th>17</th><th>18</th><th>19</th><th>20</th><th>21</th><th>22</th><th>23</th><th>24</th><th>25</th><th>26</th><th>27</th><th>28</th><th>29</th><th>30</th></tr>
<tr><td rowspan="8">max. temperature variation in Kelvin/max. (K)</td><td colspan="10">+/− 50 K</td><td colspan="20"></td></tr>
<tr><td colspan="11">+/− 45 K</td><td colspan="19"></td></tr>
<tr><td colspan="12">+/− 40 K</td><td colspan="18"></td></tr>
<tr><td colspan="14">+/− 35 K</td><td colspan="16"></td></tr>
<tr><td colspan="16">+/− 30 K</td><td colspan="14"></td></tr>
<tr><td colspan="20">+/− 25 K</td><td colspan="10"></td></tr>
<tr><td colspan="25">+/− 20 K</td><td colspan="5"></td></tr>
<tr><td colspan="30">+/− 15 K</td></tr>
<tr><td>SRO-I73-...-VT30-...,
SRO-M78-...-VT30-...</td><td colspan="30" rowspan="2">Max. span 30 metres
(Details apply to counter spring 3911042154)</td></tr>
<tr><td>SRO-M78-...-HL30-...,
SRO-M78-...-HR30-...</td></tr>
</table>

During design and installation rope supports in intervals of 2-5 m have to be provided. Please also note the safety instructions.

BERNSTEIN

DETECT

We make
safety happen.

PROTECT

We keep your
visions safe.

700 0001 099 . 10.2021 . We reserve the right to make changes

Contact

International Headquarters
BERNSTEIN AG
Hans-Bernstein-Str. 1
32457 Porta Westfalica
Phone +49 571 793-0
info@bernstein.eu
www.bernstein.eu

China
BERNSTEIN Safe Solutions (Taicang) Co., Ltd.
Phone +86 512 81608180
info@bernstein-safesolutions.cn
www.bernstein-safesolutions.cn

Denmark
BERNSTEIN A/S
Phone +45 7020 0522
info.denmark@bernstein.eu
www.bernstein.dk

Italy
BERNSTEIN S.r.l.
Phone +39 035 4549037
sales@bernstein.it
www.bernstein.it

France
BERNSTEIN S.A.R.L.
Phone +33 1 64 66 32 50
info.france@bernstein.eu
www.bernstein.fr

Austria
BERNSTEIN GmbH
Phone +43 2256 62070-0
office@bernstein.at
www.bernstein.at

United Kingdom
BERNSTEIN Ltd
Phone +44 1922 744999
sales@bernstein-ltd.co.uk
www.bernstein-ltd.co.uk

Switzerland
BERNSTEIN (Schweiz) AG
Phone +41 44 775 71-71
info.schweiz@bernstein.eu
www.bernstein-schweiz.ch

www.bernstein.eu